EBARA

EBARA TURBOMOLECULAR PUMPS

Model EMT

Model EMT

EBARA's Model EMT is a family of five different magnetic-levitation turbomolecular pumps – temperature-controlled, corrosion-resistant, ultra-low vibration, and ultra-high vacuum. Model EMT turbomolecular pumps feature a wide pressure range.

The temperature-controlled turbomolecular pump model reduces the rate condensation of the by-product and process effluent build-up commonly found inside. The patented thermal insulation structure with integrated temperature management system is the most energy efficient temperature-controlled turbomolecular pump on the market today.

The ultra-low vibration turbomolecular pump model meets cutting edge challenges in EUV lithography, micro-machining (MEMS), CD line width measurements, SEM/TEM electron microscopy, XPS, and nanotechnology analytical tools. The ultra-low vibration model produces less than 1 nm vibration amplitude. The ultra-high vacuum turbomolecular pump model efficiently evacuates the lightest gases from high vacuum down to the ultra-high vacuum region by reducing the materials' outgassing and improving the efficiency of hydrogen compression. The ultra-high vacuum turbomolecular pump model can achieve 10^{-8} Pa with a short bake-out period.

Features and Benefits

- Any orientation
- Fast start and stop
- Model coupling-free
- High throughput
- Automatic calibration
- Remote control & monitoring

Applications

Semiconductor
- Etch
- PECVD
- PVD
- Load locks
- R & D

Photovoltaic
- Thin films
- Load locks
- TCO

Non-Semiconductor
- PVD
- Sputter
- SEM
- Analytical

Options

- Air or water cooling
- Corrosion-resistant materials
- Heated pump (Controllable)
- Ultra-High vacuum pump
- Nitrogen purge
- Install kit (Valves, etc.)
- Isolation valves
- Ultra-Low vibration
- Radiation hardened

Model Description

1	2	3	4	5	6	7
EMT	900	M	I	B	A	B

1	Model	EMT	Magnetic-levitation
2	Size	N_2 Flow Rates	390 420 900 1300 2400 3260
3	Bearing system	M	Magnetically suspended
4	Special structure	 I L R U K	Normal Thermal insulation heated Ultra-low vibtration Radiation resistant Ultra-high vacuum Integrated controller
5	Inlet flange	C B	Conflat ISO-B (Bolt)
6	Cooling system	A W	Air cooling Water cooling
7	Specification type	B C	Standard Corrosive resistant

Model EMT390M

Air cooling

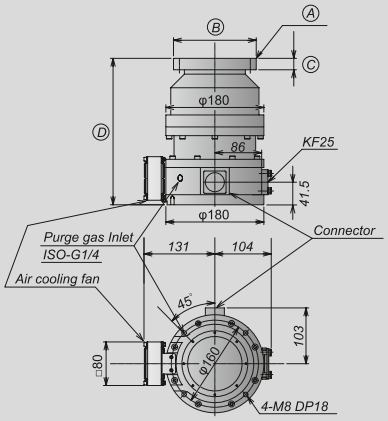

Ⓐ	Ⓑ	Ⓒ	Ⓓ
VG100	φ185	15	263
CF100	φ152	21	269
ISO-B100	φ165	12	260

Water cooling

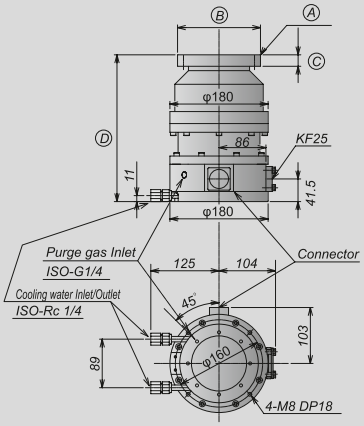

Ⓐ	Ⓑ	Ⓒ	Ⓓ
VG100	φ185	15	263
CF100	φ152	21	269
ISO-B100	φ165	12	260

Units in mm

Pumping speed N_2

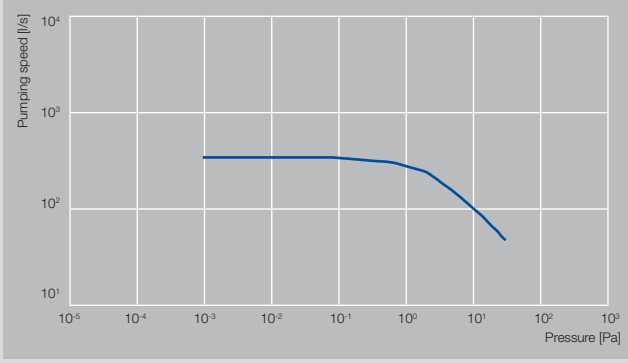

Pumping speed H_2

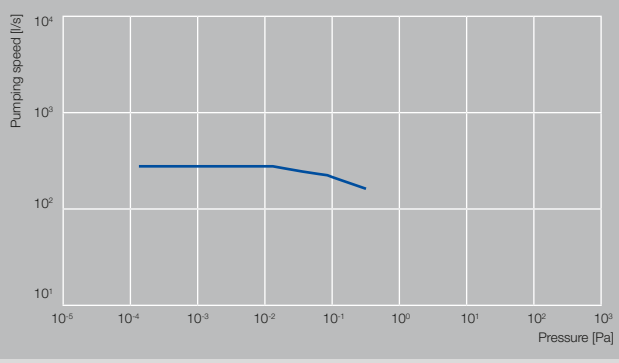

Specification			
Model			**EMT390M**
Pumping speed, [l/s]		N_2	340
		H_2	290
Compression ratio		N_2	$1x10^8$
		H_2	$4.5x10^3$
Ultimate pressure	CF flange	[Pa]	$<1x10^{-7}$
	ISO-B flange	[Pa]	$<1x10^{-6}$
Recommended backing vacuum pump		[l/min]	>160
		[m³/h]	>10
Startup time		[min]	2.0–3.0
Weight	CF flange	[kg]	17.0
	ISO-B flange	[kg]	17.0

Controllers		
Model		**ETC011M**
Input voltage	[VAC]	200–240 (±10%)
Input frequency	[Hz]	50/60
Input phases		Single
Input power	[VA]	1,200
Rate output frequency	[Hz]	680/560/520
Weight	[kg]	9
Standard accessories		Input cable (5, 10, 15, 25 meter), remote connector
Pump Model		Model EMT390M

Model EMT420M

Air cooling

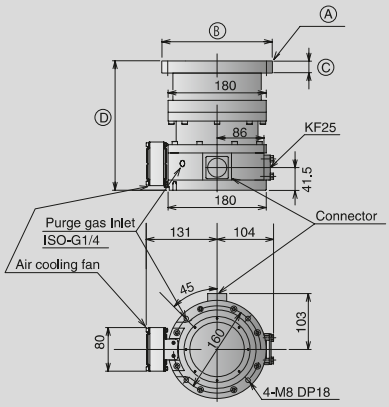

Ⓐ	Ⓑ	Ⓒ	Ⓓ
VG150	235	16	225
CF160	203	22	230
ISO-B160	225	16	230

Water cooling

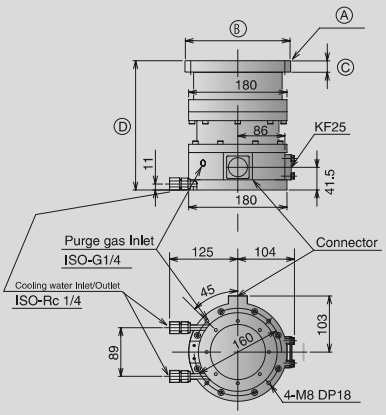

Ⓐ	Ⓑ	Ⓒ	Ⓓ
VG150	235	16	225
CF160	203	22	230
ISO-B160	225	16	230

Units in mm

Pumping speed N_2

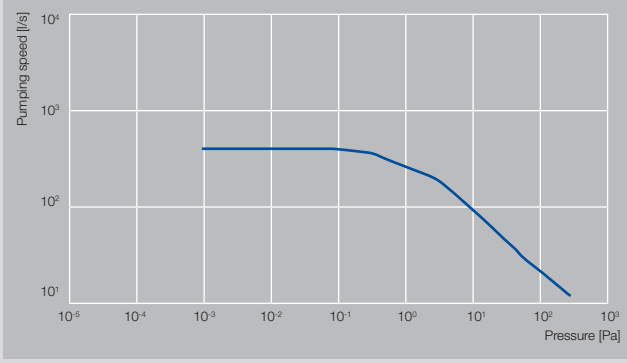

Pumping speed H_2

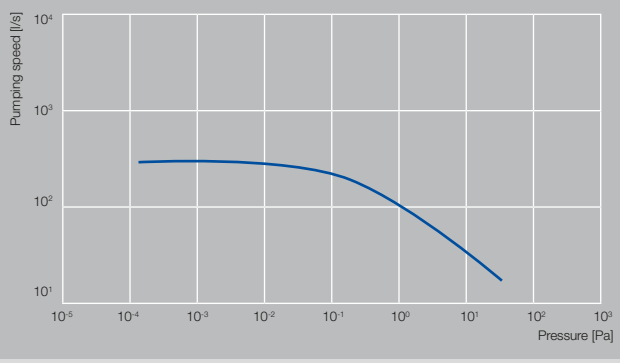

Specification			
Model			**EMT420M**
Pumping speed, [l/s]		N_2	400
		H_2	300
Compression ratio		N_2	$1x10^8$
		H_2	$4.5x10^3$
Ultimate pressure	CF flange	[Pa]	$<1x10^{-7}$
	ISO-B flange	[Pa]	$<1x10^{-6}$
Recommended backing vacuum pump		[l/min]	>160
		[m³/h]	>10
Startup time		[min]	2.0–3.0
Weight	CF flange	[kg]	17.0
	ISO-B flange	[kg]	14.0

Controllers		
Model		**ETC011M**
Input voltage	[VAC]	200–240 (±10%)
Input frequency	[Hz]	50/60
Input phases		Single
Input power	[VA]	1,300
Rate output frequency	[Hz]	680/560/520
Weight	[kg]	9
Standard accessories		Input cable (5, 10, 15, 25 meter), remote connector
Pump Model		Model EMT420M

Model EMT900M

Air cooling

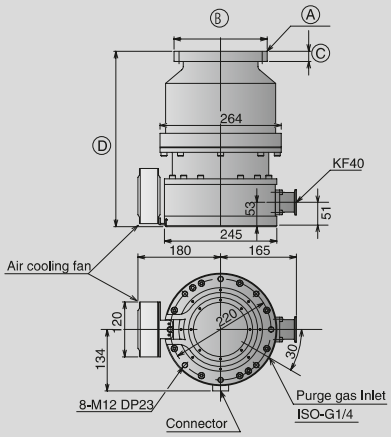

Ⓐ	Ⓑ	Ⓒ	Ⓓ
VG150	235	16	376
CF160	203	22	382
ISO-B160	225	16	390

Water cooling

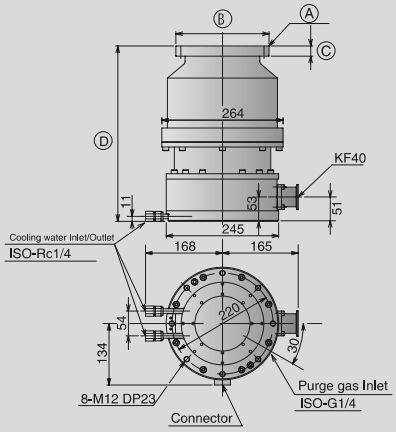

Ⓐ	Ⓑ	Ⓒ	Ⓓ
VG150	235	16	376
CF160	203	22	382
ISO-B160	225	16	390

Units in mm

Pumping speed N_2

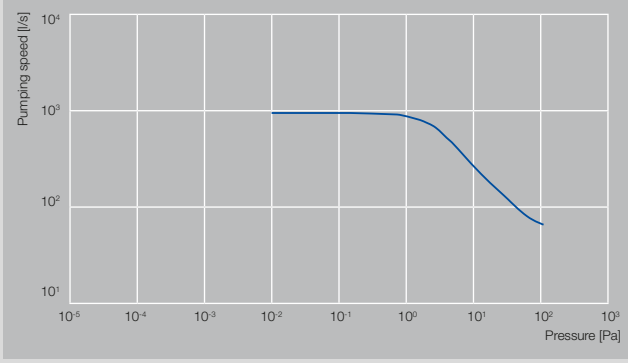

Pumping speed H_2

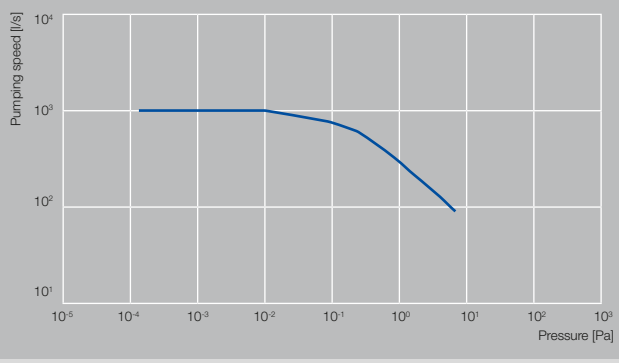

Specification			
Model			**EMT900M**
Pumping speed, [l/s]		N_2	900
		H_2	1,050
Compression ratio		N_2	$1x10^8$
		H_2	$1.5x10^4$
Ultimate pressure	CF flange	[Pa]	$<1x10^{-7}$
	ISO-B flange	[Pa]	$<1x10^{-6}$
Recommended backing vacuum pump		[l/min]	>250
		[m³/h]	>15
Startup time		[min]	4.0–5.0
Weight	CF flange	[kg]	42.0
	ISO-B flange	[kg]	34.0

Controllers		
Model		**ETC011M**
Input voltage	[VAC]	200–240 (±10%)
Input frequency	[Hz]	50/60
Input phases		Single
Input power	[VA]	1,300
Rate output frequency	[Hz]	680/560/520
Weight	[kg]	9
Standard accessories		Input cable (5, 10, 15, 25 meter), remote connector
Pump Model		Model EMT900M

Model EMT1300M

Air cooling

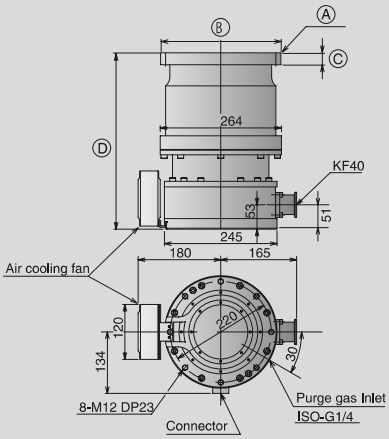

Ⓐ	Ⓑ	Ⓒ	Ⓓ
VG200	300	16	324
CF200	253	25	385
ISO-B200	285	16	359

Water cooling

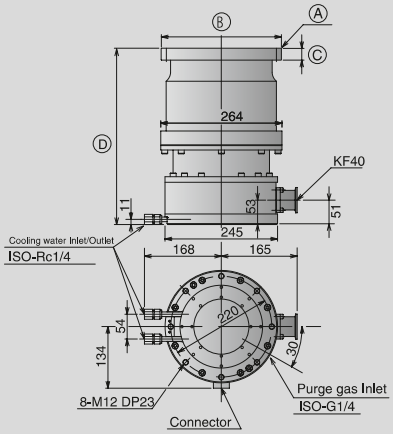

Ⓐ	Ⓑ	Ⓒ	Ⓓ
VG200	300	16	324
CF200	253	25	385
ISO-B200	285	16	359

Units in mm

Pumping speed N_2

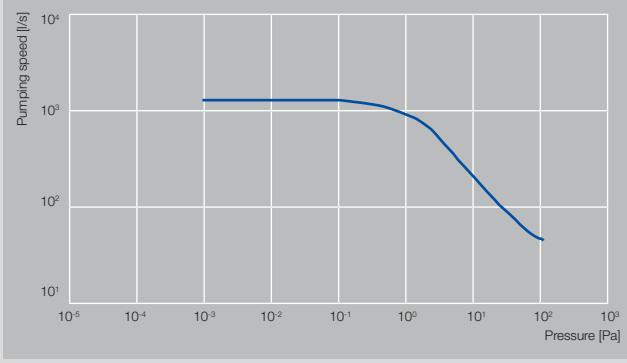

Pumping speed H_2

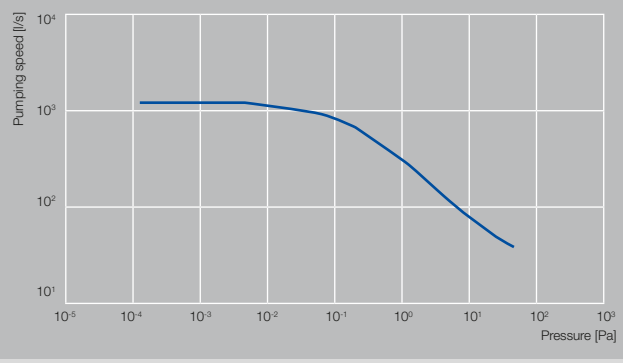

Specification			
Model			**EMT1300M**
Pumping speed, [l/s]		N_2	1,300
		H_2	1,200
Compression ratio		N_2	$1x10^8$
		H_2	$1.5x10^4$
Ultimate pressure	CF flange	[Pa]	$<1x10^{-7}$
	ISO-B flange	[Pa]	$<1x10^{-6}$
Recommended backing vacuum pump		[l/min]	>250
		[m³/h]	>15
Startup time		[min]	4.0–5.0
Weight	CF flange	[kg]	42.0
	ISO-B flange	[kg]	34.0

Controllers		
Model		**ETC011M**
Input voltage	[VAC]	200–240 (±10%)
Input frequency	[Hz]	50/60
Input phases		Single
Input power	[VA]	1,300
Rate output frequency	[Hz]	680/560/520
Weight	[kg]	9
Standard accessories		Input cable (5, 10, 15, 25 meter), remote connector
Pump Model		Model EMT1300M

Model EMT2400M

Air cooling

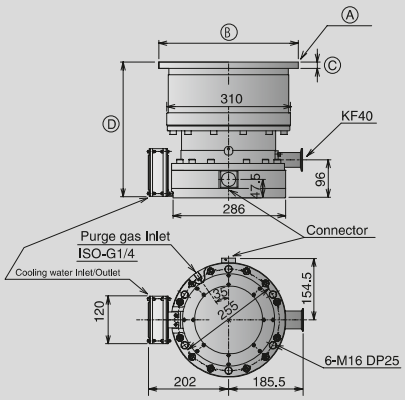

Ⓐ	Ⓑ	Ⓒ	Ⓓ
VG250	350	16	340
ISO-B250	335	16	340

Water cooling

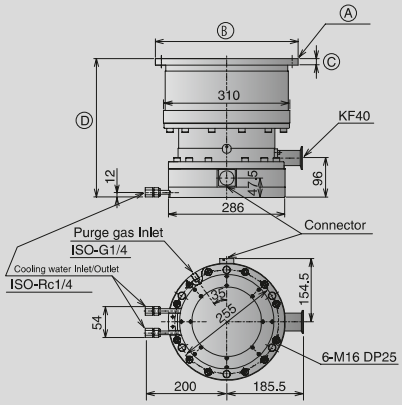

Ⓐ	Ⓑ	Ⓒ	Ⓓ
VG250	350	16	340
ISO-B250	335	16	340

Units in mm

Pumping speed N_2

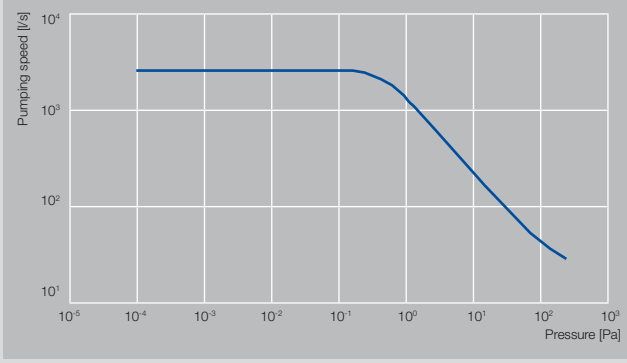

Pumping speed H_2

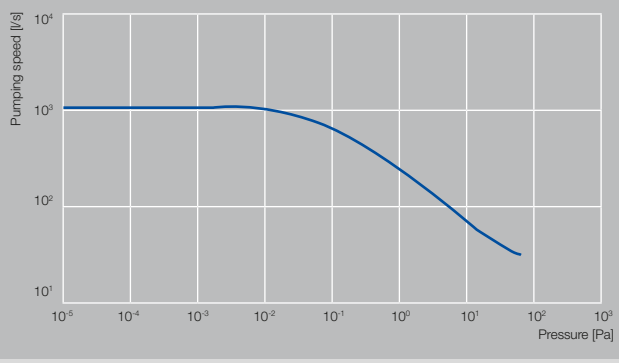

Specification			
Model			**EMT2400M**
Pumping speed, [l/s]		N_2	2,400
		H_2	1,100
Compression ratio		N_2	$1x10^8$
		H_2	$1.4x10^3$
Ultimate pressure	CF flange	[Pa]	-
	ISO-B flange	[Pa]	$<1x10^{-6}$
Recommended backing vacuum pump		[l/min]	>500
		[m³/h]	>90
Startup time		[min]	4.0–5.0
Weight	CF flange	[kg]	-
	ISO-B flange	[kg]	45.0

Controllers		
Model		**ETC011M**
Input voltage	[VAC]	200–240 (±10%)
Input frequency	[Hz]	50/60
Input phases		Single
Input power	[VA]	1,300
Rate output frequency	[Hz]	680/560/520
Weight	[kg]	9
Standard accessories		Input cable (5, 10, 15, 25 meter), remote connector
Pump Model		Model EMT2400M

Turbo Controller

Model ETC011M

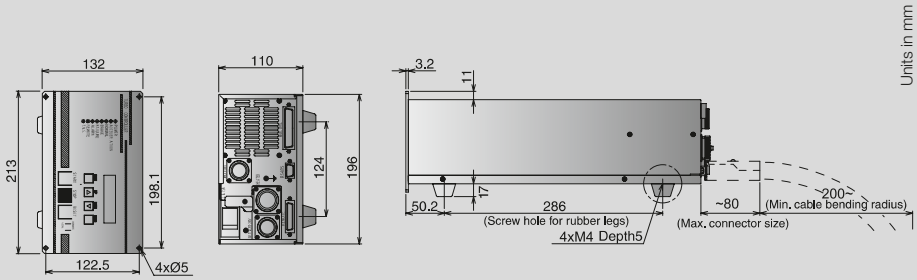

Model ETC021M

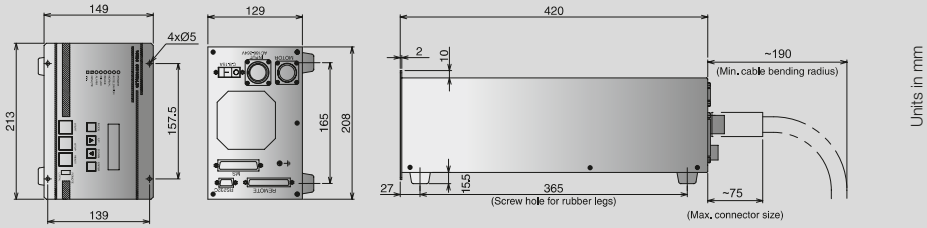

Controllers			
Model		**ETC011M**	**ETC021M**
Input voltage	VAC	200–240 (±10%)	
Input frequency	Hz	50/60	
Input phases		Single	
Input power	VA	700/1,000/1,300/1,600/1,700	1,200
Rate output frequency	Hz	560	360
Weight	kg	9	9
Standard accessories		Input cable (5, 10, 15, 25 meter), remote connector	
Pump Models		Model EMT390M, 420M, 900M, 1300M, 2400M	Model EMT3260M

Backing Pumps Model EV-A

Model EV-A Dry Vacuum Pumps are a family of air-cooled pumps that have industry-leading specifications. The family consists of the Model EV-A03 (12.8 m^3/h), Model EV-A06 (36 m^3/h), and Model EV-A10 (60 m^3/h) pumps. All three pumps have a non-contact, multi-staged Roots design for reliable, particle-free vacuum generation. They are available with either single-phase or three-phase power. When used with the optional gas ballast valve, they have industry-leading water pumping capability. Typical applications include load locks, PVD systems, analytical instruments and electron microscopes. These pumps are ideal for replacing wet pumps as well as scroll-type dry vacuum pumps.

Model EV-A03

Model EV-A06

Model EV-A10

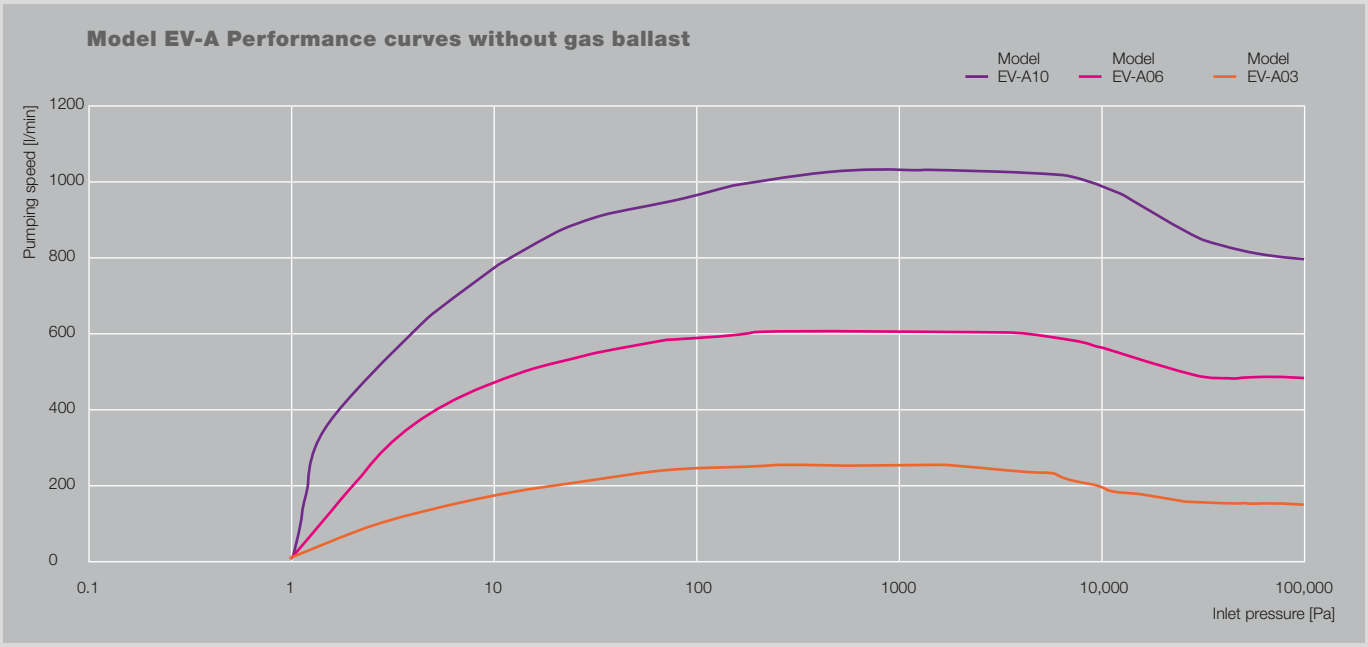

Technical data

Model		EV-A03	EV-A06	EV-A10
Pumping speed	[m^3/h]	15	36	60
	[l/min]	250	600	1,000
Ultimate pressure	[mbar]	$1x10^{-2}$		
	[Pa]	1.0		
Ultimate pressure with gas ballast	[mbar]	$1x10^{-1}$		$2x10^{-2}$
	[Pa]	10.0		2.0
Water vapor capacity	[g/h]	250	350	500
Voltage	[V]	100–115 1-ph, 50/60 Hz		-
		200–240, 1-ph, 50/60 Hz		
		200–240, 3-ph, 50/60 Hz		
Power at ultimate pressure	[kW]	0.35	0.55	1.1
Weight, approx.	[kg]	23	54	75
Sizes (LxWxH)	[mm]	385x250x210	470x275x298	544x317x344

Backing Pumps Model PDV

Provides for a clean, reliable vacuum for today's high tech manufacturing, semiconductor, thin film, photovoltaic, biomedical and pharmaceutical industries. Model PDV Dry Vacuum Pumps offers an oil free energy efficient solution for replacing scroll and oil pumps for clean applications.

The PDV Series Dry Vacuum Pumps require no annual maintenance and offers a low cost of ownership and higher return on investment (ROI). The serial communication allows both remote monitoring and control to the PDV Series Dry Vacuum Pumps.

Model PDV250

Model PDV500

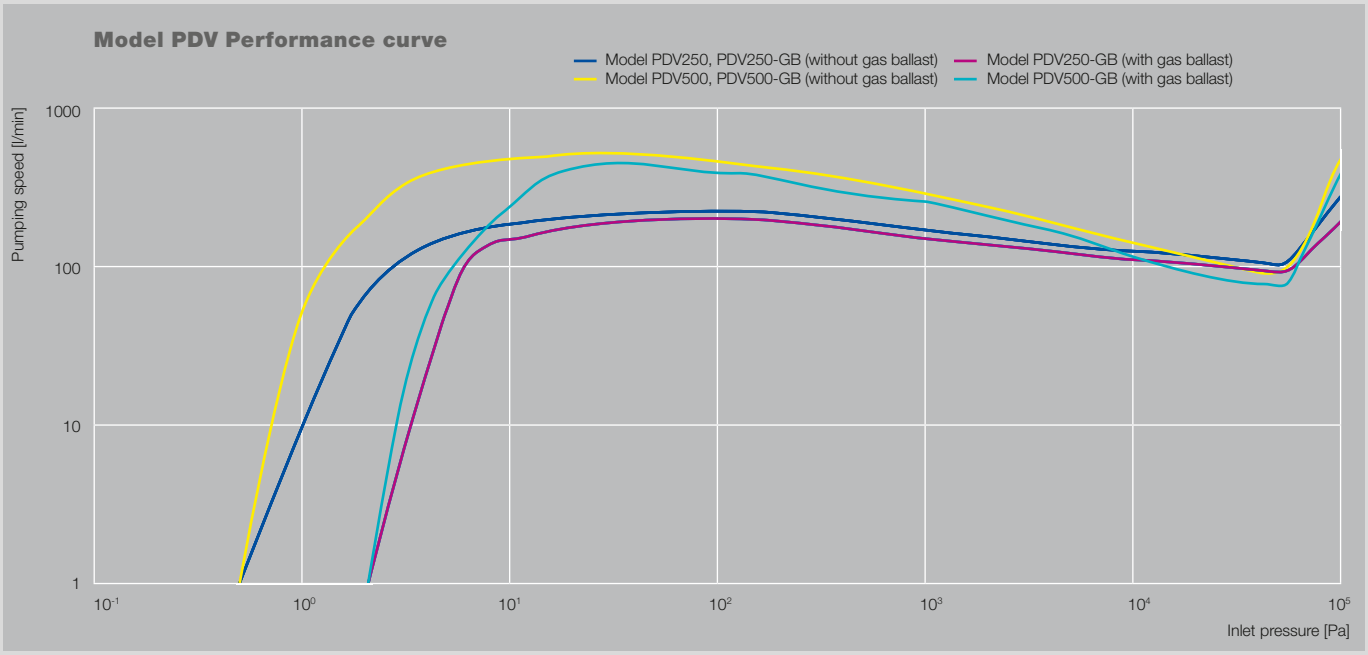

Technical Data

Model		PDV250-GB	PDV500-GB
Pumping speed (N_2)	[m^3/h]	13.8	30
	[l/min]	230	500
Pumping speed with gas ballast (N_2)	[m^3/h]	12	25.8
	[l/min]	200	430
Ultimate pressure	[mbar]	$5x10^{-3}$	$5x10^{-3}$
	[Pa]	0.5	0.5
Ultimate pressure with gas ballast	[mbar]	$2x10^{-2}$	$2x10^{-2}$
	[Pa]	2	2
Voltage range	[V]	100–240 V, 50/60 Hz, single phase	
Power at ultimate pressure	[W]	240	270
Weight, approx.	[kg]	15	20
Sizes (LxWxH)	[mm]	168x442x273	185x467x305
Noise Level	[dB(A)]	58	58

Branch Offices Europe

Great Britain
European Service Centre
2 Cochrane Square
Brucefield Ind. Park,
GB-Livingston, Great Britain
West Lothian EH54 9DR
Phone: +44 (1506) 46 02 32

France
14, rue du Bois Sauvage
F-91055 Evry
Phone: +33 (1) 60 87 00-00

Germany
Zur Wetterwarte 50, Haus 133
D-01109 Dresden
Phone: +49 (351) 888 57 60

Ireland
Mailstop IR4-1-9
FAB24 Collinstown Industrial Park
Leixlip, Co. Kildare
Phone: +351 (1) 606 71 63

Israel
5 Hatassia st.
POB 112
Migdal Haemeq 23100
Phone: +972 (4) 834 39 66

European Headquarters
EBARA Precision Machinery Europe GmbH

Rodenbacher Chaussee 6
D-63457 Hanau
Germany
Tel.: +49-6181-1876-0
Email: info@ebara-pm.eu
Internet: www.ebara-pm.eu

© EBARA EMT-Br-001/ Technical alterations reserved.